AEC®

Abundance Enterprise Co.

PRODUCT SPECIFICATION

SAW RESONATOR

AEC PART NUMBER / SPEC. NO: SR433.92-75-TO39

CUSTOMER: Schukat electronic Vertriebs GmbH

RoHS Compliant

This model is ROHS/PB-free compliance according to the ROHS directive 2002/95/EC

Customer's Name	**Schukat electronic Vertriebs GmbH**
Production Name	**SAW RESONATOR**
Frequency	**433.92MHz**
Model No	**TO39**
Issue Date	**15th Oct, 2013**

Address: Room 602-603, Java Commercial Centre,

128 Java Road,

North Point, Hong Kong

Homepage: http://www.aeccrystal.com/

Email: sales@aeccrystal.com

Telephone: (852)-28560000

Fax (852) 2561 2161

Prepared	Inspection	Approved
Nathan	*Andy*	*Henkie*

1. GENERAL PROVISION

The SR433.92 is a true one- port， surface- acoustic- wave(SAW) resonator in a low- profile TO-39 case. It provides reliable， fundamental- mode， quartz frequency stabilization of fixed- frequency transmitters operating at 433.92 MHz.

2. DIMENSION

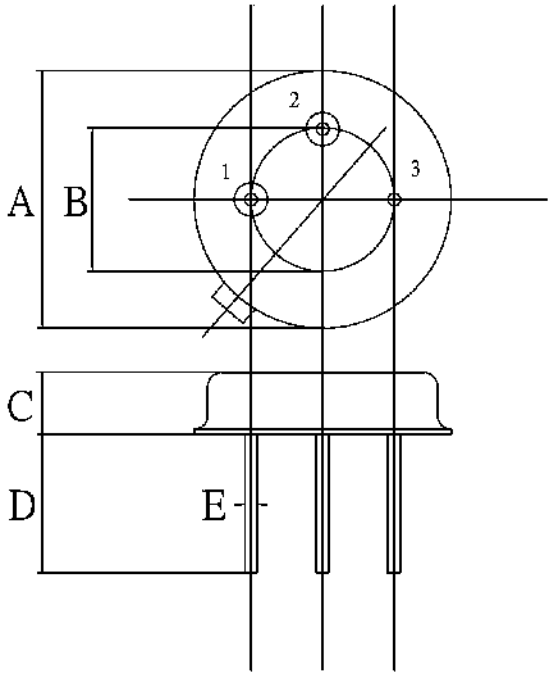

Pin	Connection
1	Terminal 1
2	Terminal 2
3	Case Ground

Dimensions	Data (Unit: mm)
A	9.30±0.20
B	5.08±0.10
C	3.40±0.20
D	3±0.20
E	0.45±0.20

AEC® Abundance Enterprise Co.		NO.	Revised DATE	MODIFY CONTENTS		
		1	2006.12.15	NEW UPDATE		
DIMENTION	mm					
SCALE		PART NAME		SAW RESONATOR		
TOLERANCE	±0.2	MODEL		TO39		
DRAWING NO. 433.92-TO39				APPV'D BY Henkie	CHECK BY Andy	DRAWN BY Nathan

3. EQUIVALENT LC MODEL AND TEST CIRCUIT

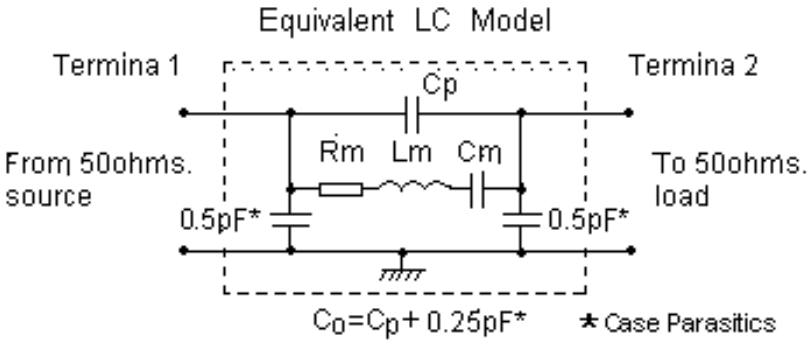

4. FREQUENCY RESPONSE

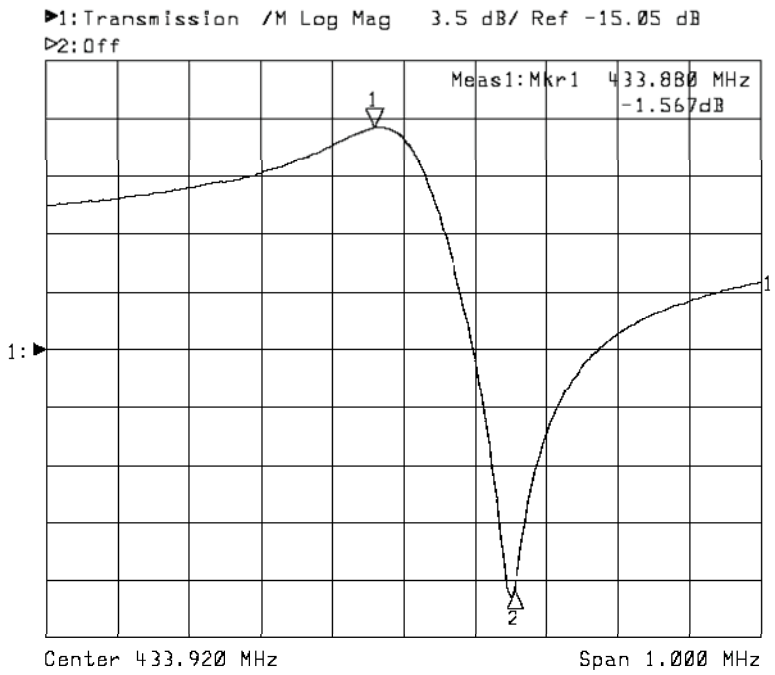

5. ELECTRICAL SPECIFICATION

5-1.Maximum Rating

Rating	Value	Units
CW RF Power Dissipation	+10	dBm
DC Voltage Between Any Two Pins	±30V	VDC
Case Temperature	-40 to +85	℃

5-2.Electronic Characteristic

Reference temperature: TA = 25℃

Terminating source impedance: Zs = 50Ω and matching network

Terminating load impedance: ZL = 50Ω and matching network

Characteristic		Sym	Minimum	Typical	Maximum	Units
Center Frequency (+25℃)	Absolute Frequency	f_C	433.845		433.995	MHz
	Tolerance from 433.92 MHz	$\triangle f_C$		±75		kHz
Insertion Loss		IL		1.5		dB
Quality Factor	Unloaded Q	Q_U		11,274		
	50 Ω Loaded Q	Q_L		1,800		
Temperature Stability	Turnover Temperature	T_O	25	40	55	℃
	Turnover Frequency	f_O		fc		kHz
	Frequency Temperature	FTC		0.037		ppm/℃
Frequency Aging Absolute Value during the First		$\|f_A\|$		≤10		ppm/yr
DC Insulation Resistance Between Any Two Pins			1.0			MΩ
RF Equivalent RLC Model	Motional Resistance	R_M		19	23	Ω
	Motional Inductance	L_M		78.605		μH
	Motional Capacitance	C_M		1.7132		fF
	Pin 1 to Pin 2 Static Capacitance	C_O		1.9		pF

6. TYPICAL APPLICATION CIRCUIT

1) Typical Low-Power Transmitter Application

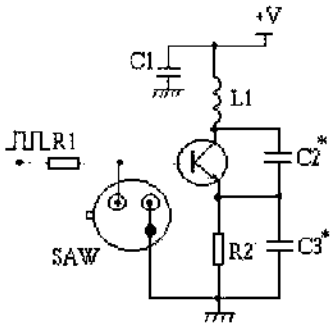

2) Typical Local Oscillator Application

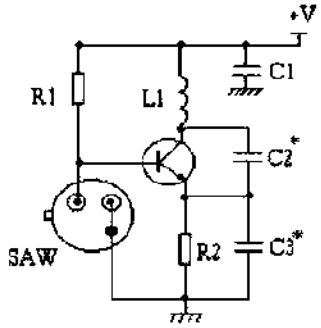

8. REMARKS

1. Frequency aging is the change in f_C with time and is specified at +65℃ or less. Aging may exceed the specification for prolonged temperatures above +65℃. Typically, aging is greatest the first year after manufacture, decreasing in subsequent years.

2. The center frequency, f_C, is the frequency of minimum IL with the resonator in the specified test fixture in a 50 Ω test system with VSWR ≤ 1.2 : 1. Typically, $f_{oscillator}$ or $f_{transmitter}$ is less than the resonator f_C.

3. Typically, equipment utilizing this device requires emissions testing and government approval, which is the responsibility of the equipment manufacturer.

4. Unless noted otherwise, case temperature T_C=+25℃ ±2℃.

5. The design, manufacturing process, and specifications of this device are subject to change without notice.

6. Derived mathematically from one or more of the following directly measured parameters: f_C, IL, 3 dB bandwidth, f_C versus T_C, and C_O.

7. Turnover temperature, T_O, is the temperature of maximum (or turnover) frequency, f_O, The nominal center frequency at any case temperature, T_C, may be calculated from $f = f_O[1\text{-}FTC(T_O\text{-}T_C)^2]$. Typically, oscillator T_O is 20℃ less than the specified resonator T_O.

8. This equivalent RLC model approximates resonator performance near the resonant

frequency and is provided for reference only. The capacitance C_O is the measured static (non motional) capacitance between either pin 1 and ground or pin 2 and ground. The measurement includes case parasitic capacitance with a floating case. For usual grounded case applications (with ground connected to either pin 1 or pin 2 and to the case), add approximately 0.25 pF to C_O.